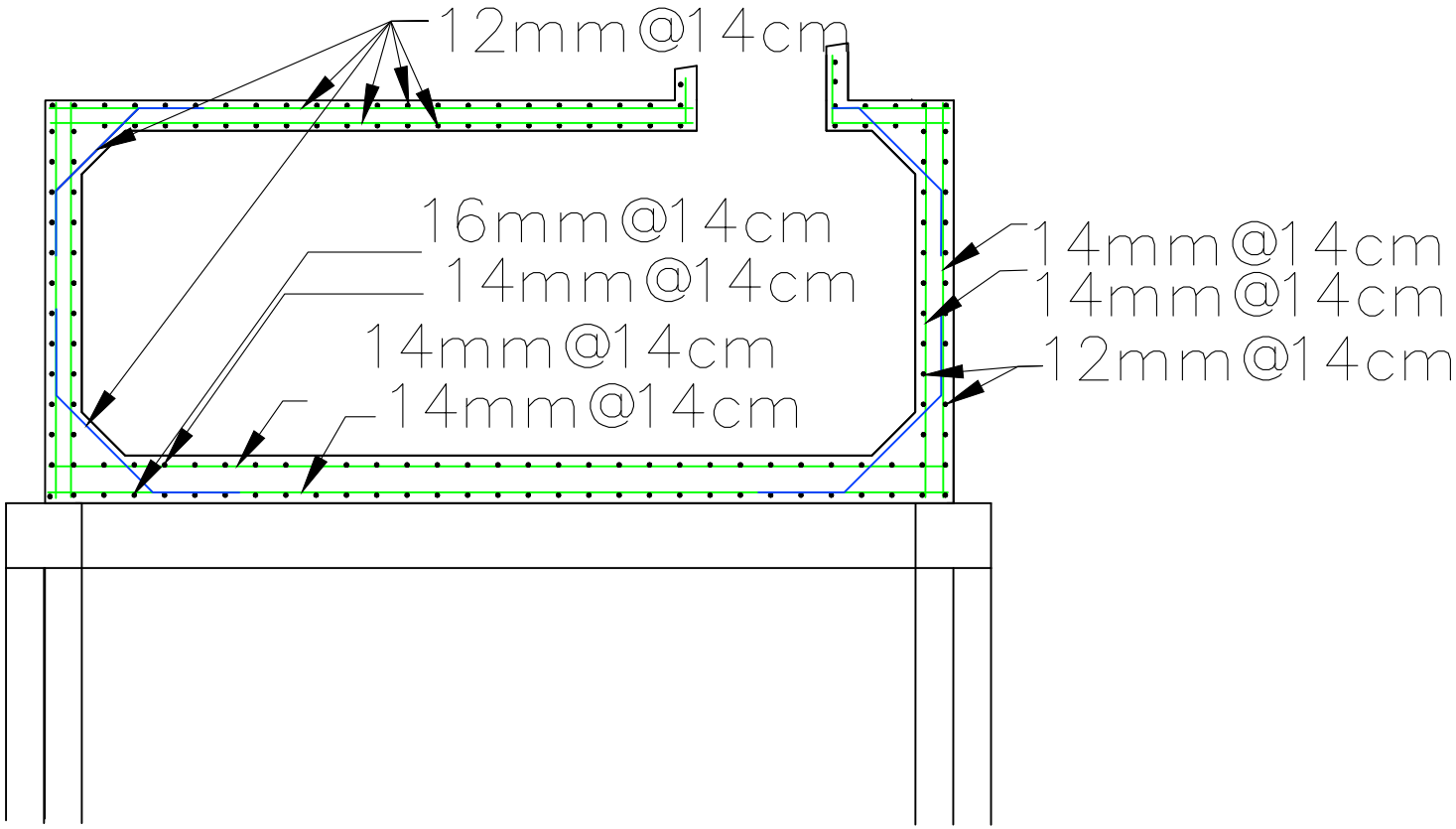
12mm@14cm
16mm@14cm
14mm@14cm
14mm@14cm
14mm@14cm
14mm@14cm
14mm@14cm
12mm@14cm

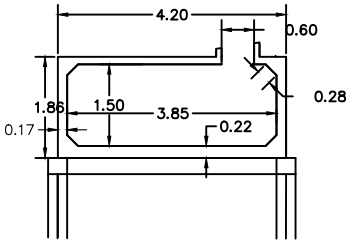
4.20
0.60
0.28
1.86
1.50
3.85
0.17
0.22

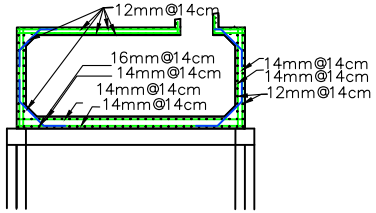
12mm@14cm
16mm@14cm
14mm@14cm
14mm@14cm
14mm@14cm
14mm@14cm
14mm@14cm
12mm@14cm

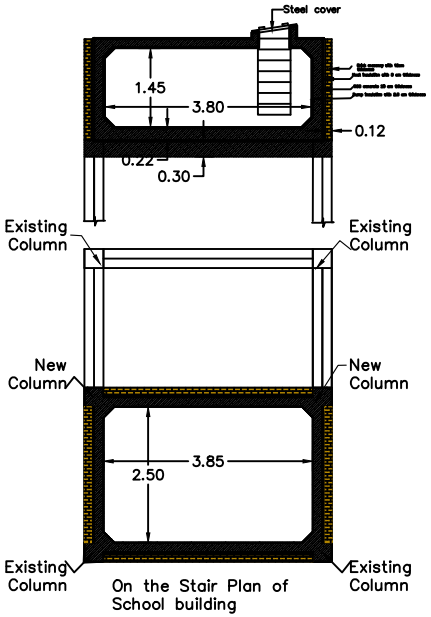
Steel cover
1.45
3.80
0.12
0.22
0.30
Existing Column
Existing Column
New Column
New Column
3.85
2.50
Existing Column
Existing Column
On the Stair Plan of School building