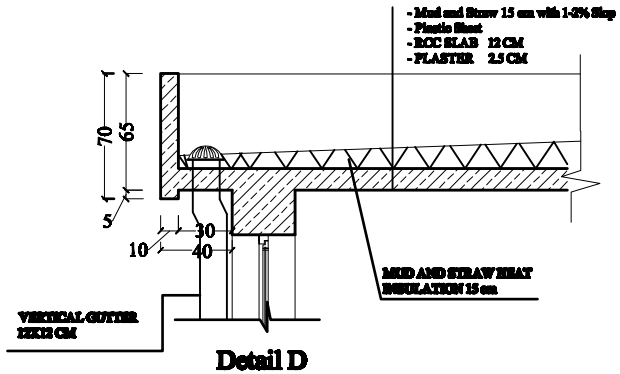

Detail D

Scale 1:40

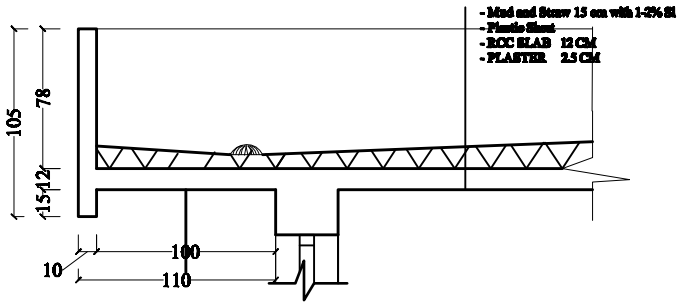

Detail E

Scale 1:40

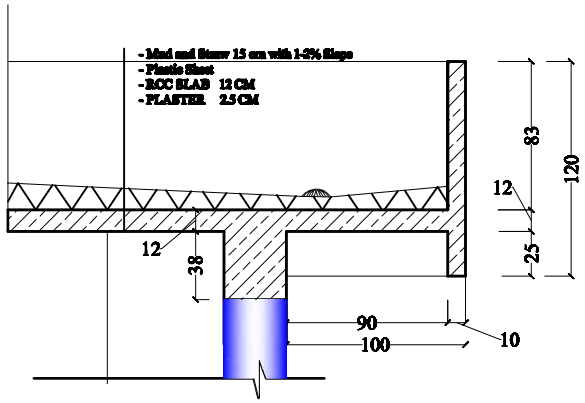

Detail F

Scale 1:40

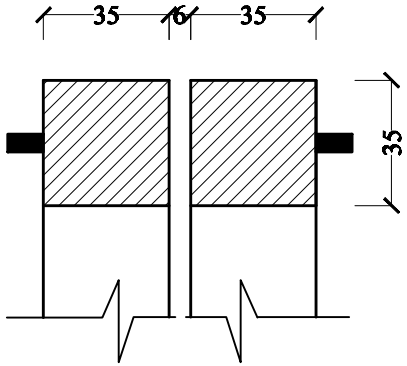

DETAIL A
Scale 1:20

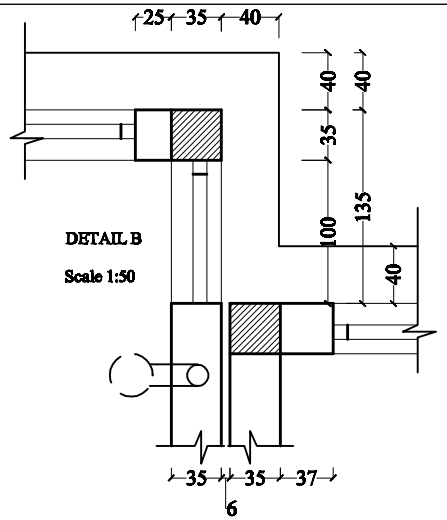

DETAIL B

Scale 1:50

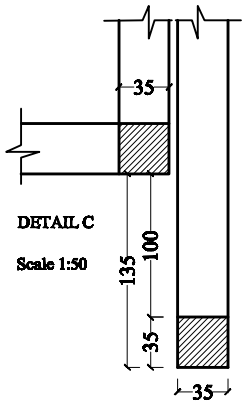

DETAIL C

Scale 1:50

MINISTRY OF EDUCATION DEPARTMENT OF CONTRACTION	STANDARD SCHOOL DESIGN IN AFGHANISTAN	ARCHITECT/DESIGN	AH.FEROZ TAHERY	APPROVED:Doc/Mos	ENG.BAZ MOH.BAZ	DRAWING No	
		CHECKED BY	ENG.GH.HAZRAT	SCALE	AS SHOWN (A4)	SHEET No	8/7
		TECH- APPROVED BY	ENG.AB.MATIN MAQQL	DATE	25,6,2006		

PROJECT NAME	8 CLASS ROOM BURNT BRICK ISO GAME ROOF.
DRAWING TITLE	DETAIL